Novelis Inc.
1 LAPPAN'S LANE
P.O. BOX 2000
KINGSTON, ONTARIO,CANADA K7L4Z5

CERTIFICATION OF PROPERTIES AND CHEMICAL ANALYSIS

SOLD TO:
MANDEL METALS INC
11400 ADDISON STREET

FRANKLIN PARK IL
60131

SHIP TO:
MANDEL METALS INC
11400 ADDISON STREET

FRANKLIN PARK IL
60131

PRINT DATE:
2009/04/17

CUST PO: 02-11832
CUST PART #:
SALES ORDER: 66515340-0010
LOAD: HZ84 **PACK:** 52644221 **COIL:** K05406A **NET WT:** 9237 lbs
ALLOY: 6061 **TEMPER:** T6 **GAUGE:** 0.0630 in **WIDTH:** 48.000 in
MECHANICAL SPECIFICATIONS: AMS-QQ-A-250/11-97 ASTM B209-02 AMS4027M
GAUGE LENGTH = 2.00 in

I certify that the materials detailed herein have been tested and that documentary evidence of the test or release certificate is on file.

Per David Lister
Process Leader

Location: FRONT END		UOM	TEMPER	TEST DATE
UTS	T:45.95	ksi	T6	17-APR-2009
YTS	T:38.17	ksi	T6	17-APR-2009
Elongation	T:13	%	T6	17-APR-2009
Tensile Thickness	T:0.0604	in	T6	17-APR-2009

Location: BACK END				
UTS	T:44.08	ksi	T6	17-APR-2009
YTS	T:37.08	ksi	T6	17-APR-2009
Elongation	T:12	%	T6	17-APR-2009
Tensile Thickness	T:0.0609	in	T6	17-APR-2009

Chemistry

***** LAYER: 01 *****
Al 97.6900 Si 0.5500 Fe 0.4600 Cu 0.2200 Mn 0.0100 Mg 0.8800 Cr 0.1700 Ni 0.0000 Zn 0.0100
Ti 0.0100 Be 0.0000 Pb 0.0000
EACH: 0.0000 TOTAL: 0.0000

P00428

DART aerospace
Dart Aerospace Ltd.
1270 Aberdeen Street
Hawkesbury, ON K6A 1K7
Tel: 613 632 9577
Fax: 613 632 1053

PO REPRINT

Purchase Order ID PO11060

Purchase Order Date 1/07/10
PO Print Date 1/07/10

Order From : VC-MAG002

MAGNA STAINLESS
5775 RUE KIERAN
ST LAURENT, QC H4S 0A3
CA

Contact Name		**Buyer**	Chantal Lavoie
Vendor Phone	800 363 6646	**Requisition Nbr**	
Vendor Fax	514 339 1105	**Tax Resale Nbr**	10127-2607
Vendor Account Nbr		**Terms**	Net 30
		Currency	CAD
		FOB	

			ALUMINUM SHEET AS PER QQ-A-250/11 OR AMS-QQ-A-250/11 OR AMS 4025 AMS 4027 OR ASTM B209				
5	M6061T6S.063	6061-T6 .063 Sheet	1/11/10 Yes	256.00 sf	Yours ppd	$4.5312	$1,159.99
		Special Inst:	MATERIAL SAME AS ABOVE				
6	M2024T3S.080	2024-T3 .080 sheet	1/15/10 Yes	196.00 sf	Yours ppd	$10.9375	$2,143.75
		Special Inst:	MATERIAL: 2024-T3 ALUMINUM SHEET AS PER QQ-A-250/4 OR AMS-QQ-AA-250/4 OR AMS 4037 OR ASTM B209				
7	M7075T6B1.000X1.000	7075 T6 BAR 1.00 x1.00	1/15/10 Yes	12.00 f	Yours ppd	$16.2500	$195.00
		Special Inst:	MATERIAL: 7075-T6/T651/T6511/T62 ALUMINUM BAR PER AMS-QQ-A-225/9 OR AMS 4122/4123/4186/4187 OR PER AMS-QQ-A-200/11				
8	M304TS0.750W.049	304 SQ Tube .75x.75x.049W	1/15/10 Yes	100.00 f	Yours ppd	$3.2500	$325.00
		Special Inst:	MATERIAL: 304 SEAMLESS SQUARE TUBING NO MILL FINISH				

MATERIAL CERTIFICATION REQ'D UPON DELIVERY

PO Total: **$4,831.66**

CL

No substitution or deviation without consent.
Certificate of Conformity or Material Certification required when applicable

Change Nbr: 2 **Change Date:** 1/07/10

Dart Aerospace Ltd.
1270 Aberdeen Street
Hawkesbury, ON K6A 1K7
Tel: 613 632 9577
Fax: 613 632 1053

PO REPRINT

Purchase Order ID PO11060

Purchase Order Date 1/07/10
PO Print Date 1/07/10

Order From :

MAGNA STAINLESS
5775 RUE KIERAN
ST LAURENT, QC H4S 0A3
CA

VC-MAG002

FAXED

Contact Name
Vendor Phone 800 363 6646
Vendor Fax 514 339 1105
Vendor Account Nbr

Buyer Chantal Lavoie
Requisition Nbr
Tax Resale Nbr 10127-2607
Terms Net 30
Currency CAD
FOB

Ship To : DART AEROSPACE LTD 1270 ABERDEEN
HAWKESBURY, ON K6A 1K7
CANADA

Line Nbr	Reference / Revision ID / Vendor Part Number	Description/ Mfg ID	Req Date/ Taxable	Req. Qty/ Unit of Measure	Ship Method	Unit Price	Extended Price
1	M6061T6R0.625	6061-T6 Round Bar .625"	1/15/10 Yes	40.00 f	Yours ppd	$3.8000	$152.00
		Special Inst:	MATERIAL: 6061-T6/651/T6510/T6511/T62 ALUMINUM ROUND BAR AS PER QQ-A-225/8 OR AMS-QQ-A-225/8/AMS 4117/4128/4115/4116 OR ASTM B211 OR ASTM B221				
2	M6061T6B00750X00.125	6061-T6 Bar .750 x .125	1/11/10 Yes	80.00 f	Yours ppd	$0.2500	$20.00
		Special Inst:	MATERIAL SAME AS ABOVE				
3	M6061T6B2.000X01.250	6061-T6 Bar 2.00 x 1.25	1/11/10 Yes	24.00 f	Yours ppd	$11.0800	$265.92
		Special Inst:	MATERIAL SAME AS ABOVE				
4	M6061T6S.125	6061-T6 .125 Sheet	1/11/10 Yes	96.00 sf	Yours ppd	$5.9375	$570.00
		Special Inst:	MATERIAL: 6061-T6/T62				

MAGNA INOXYDABLE

Magna Stainless
5775 Kieran St, Saint-Laurent, Quebec H4S 0A3
Phone: (514) 339-1211 Watts: 1-800-363-6646 Fax: (514) 339-1105

PACKING LIST

Page 1 of 1 I021555

SOLD TO:
DART AEROSPACE LTD
1270 ABERDEEN STREET

HAWKESBURY , ON
K6A 1K7
Contact: CHANTAL

SHIP TO:
DART AEROSPACE LTD
1270 ABERDEEN STREET

HAWKESBURY , ON
K6A 1K7
Ship Terms: PREPAID

MTR:Y

SPECIAL INSTRUCTIONS

Currency	Sales Person	Customer Phone	Customer Fax	Customer PO
CANADIAN DOLLARS	ERYCK BLAIS	(613) 632-5200	(613) 632-1053	PO11060

Sales Order	Terms	Ship Via	Date Ordered	Date Required	Date Shipped
W023590	NET 30 DAYS	NIR:R-557065-1	01/07/10	01/11/10	01/11/10

Ordered	Back Ordered	Unit	Description		Bundle #	Heat #	Shipped
			ALUMINUM FLATS				
4		PC	AFL 6061 T6 1/8" x 3/4" x R/L 20'	9 LB / 4 PC	L026372	07C043	4 4
2		PC	AFL 6061 T6 1-1/4" x 2" x R/L 20'	118 LB / 2 PC	L030399	46512	2 2
			ALUMINUM SHEET				
3		PC	ASH 6061 T6 .125" x 48" x 96"	173 LB / 3 PC	L031565	329280101	3 3
6		PC	ASH 6061 T6 .063" x 48" x 144"	261 LB / 6 PC	L025694	K05406A	6 6
			NO N/A MAT'L				
Bundles: 1	Skids: 1				Approx	Weight:	561 LB

Rc 10/01/11

Received by: _____ Date: _____ Signature: _____

Purchase Order Receipt Listing

January 11, 2010 8:56:50 AM

All amounts are calculated in domestic currency.

All Vendors PO ID PO11060 Receipt Dates from 1/11/2010 to 1/11/2010 All Line Item Types
All Item ID/GL/WOs All Rec. Employees All Currencies
Grouped by Vendor ID

Purchase Order ID/ Curr Type	Line Nbr/ Insp Req	Project ID	Reference/ Description/ Cert Std	PO U/M / Stock U/M	Required Date Required Qty	Recv Date/ Recv Emp	Recv Qty (PO U/M)	Cost Per Unit/ Recv Value	Inspected Qty/ Rejected Qty (PO U/M)	MRB Qty/ MRB Reject Qty	Book Amt
VendorID\Vendor Name			VC-MAG002 Magna Stainless								
PO11060	2		M6061T6B00750X00 .125	f	1/11/2010	1/11/2010	80.0000	$0.25	0.0000	0	$20.00
CAD	No		6061-T6 Bar .750 x .125	f	80.0000	Stores		$20.00	0.0000	0	
			113608								
	3		M6061T6B2.000X01.250	f	1/11/2010	1/11/2010	40.0000	$11.08	0.0000	0	$443.20
	No		6061-T6 Bar 2.00 x 1.25	f	24.0000	Stores		$443.20	0.0000	0	
			113608								
	4		M6061T6S.125	sf	1/11/2010	1/11/2010	96.0000	$5.94	0.0000	0	$570.00
	No		6061-T6 .125 Sheet	sf	96.0000	Stores		$570.00	0.0000	0	
			113608								
	5		M6061T6S.063	sf	1/11/2010	1/11/2010	288.0000	$4.53	0.0000	0	$1,304.99
	No		6061-T6 .063 Sheet	sf	256.0000	Stores		$1,304.99	0.0000	0	
			113608								

Total Received Quantity:	504.0000
Total Qty to Inspect (PO U/M):	0.0000
Total Reject Quantity:	0.0000
Total Receipt Value:	$2,338.19
Total Balance Due Quantity:	0.0000

MAGNA INOXYDABLE

Magna Stainless
5775 Kieran St, Saint-Laurent QC H4S 0A3
Phone: (514) 339-1211 Watts: 1-800-363-6646 Fax: (514) 339-1105

INVOICE

 I021555

SHIP TO:
DART AEROSPACE LTD
1270 ABERDEEN STREET
HAWKESBURY , ON
K6A 1K7
MTR:Y

SOLD TO:

DART AEROSPACE LTD
1270 ABERDEEN STREET
HAWKESBURY , ON
K6A 1K7

INVOICE DATE:	01/11/10
ORDER DATE:	01/07/10
SHIP DATE:	01/11/10
ORDER NUMBER:	W023590
PURCHASE ORDER:	PO11060

Currency	Sales Person	Ship Via	F.O.B.	Terms
CANADIAN DOLLARS	ERYCK BLAIS	NIR:R-557065-1	PREPAID	NET 30 DAYS

Ln	Back Ordered	Ordered	Unit	Description	Shipped	Price Per	Value
				ALUMINUM FLATS			
		4	PC	AFL 6061 T6 1/8" x 3/4" x R/L L026372 20' 4 PC/9 LB	4 UN	5.00	20.00
		2	PC	AFL 6061 T6 1-1/4" x 2" x R/L L030399 20' 2 PC/118 LB	2 UN	133.00	266.00
				ALUMINUM SHEET			
		3	PC	ASH 6061 T6 .125" x 48" x 96" L031565 3 PC/173 LB	3 UN	190.00	570.00
		6	PC	ASH 6061 T6 .063" x 48" x 144" L025694 6 PC/261 LB NO N/A MAT'L	288.00 SFT	4.5312	1,304.99

RECEIVED JAN 18 2010

01/12/10 10:47:24

PST Exmp No:EXEMPT

Merchandise:	2,160.99
Surcharges:	
No Tax Costs:	
GST	108.05
Total Due:	2,269.04

Title to the goods sent out on this invoice remains with Magna Stainless Div of CSM ULC until such time as this invoice has been paid in full. Unless otherwise noted terms are 30 days. Interest accrues on all overdue accounts at the rate of 1.5% per month compounded monthly.

Q.S.T. # 1213236471
G.S.T. # 881565899 RT0001

Receiving Report

Date: 10/01/11

Batch No: M113608

Supplier: MAGNO

Dart P/O: 11060

Packing Slip: Yes ✓ No
Invoice: Yes ___ No ✓
Receipt: Cash ___ Cr ✓

Release Note Attached: Yes ✓ No ___ N/A ___
Waybill Attached: Yes ___ No ✓
Shipment Complete: Yes ___ No ✓ N/A ___
QC6 Inspection ✓ N/A ~~✓~~
Work Order 10/01/11 N/A ✓

Discrepancies

Part Number	Description	Quantity Ordered	Quantity Received	Quantity Returned	Quantity Short	Comments

Initials of receiver (if shipment OK) Level 12

Production/Admin:
Date 10/01/11
Received/Costing
Initial

Location ___

H:\FORMS\Purchasing\approved purch\RECREPORT Rev D

DART AEROSPACE LTD	Work Order:	62298
Description: SPACER	Part Number:	D4107-5
Inspection Dwg: D4107-5 Rev: A		Page 1 of 1

FIRST ARTICLE INSPECTION CHECKLIST

[X] First Article [ ] Prototype

Drawing Dimension	Tolerance	Actual Dimension	Accept	Reject	Method of Inspection	Comments
.40	+/- .030	.400	X		V HB07	
2.00	+/- .030	2.000	X		V	
.063	+/- .010	.062	X		V	

Measured by:	HB
Date:	10-9-07

Audited by:	S
Date:	10/09/28

Prototype Approval:	N/A
Date:	N/A

Rev	Date	Change	Revised by	Approved
A		New Issue	KJ/JLM	

Dart Aerospace Ltd

W/O:		WORK ORDER CHANGES					
DATE	STEP	PROCEDURE CHANGE	By	Date	Qty	Approval Chief Eng / Prod Mgr	Approval QC Inspector

Part No: _____ PAR #: _____ Fault Category: _____ NCR: Yes No DQA: _____ Date: _____

Resolution: _____ Disposition: _____ QA: N/C Closed: _____ Date: _____

NCR:		WORK ORDER NON-CONFORMANCE (NCR)						
DATE	STEP	Description of NC Section A	Corrective Action Section B			Verification Section C	Approval Chief Eng	Approval QC Inspector
			Initial Chief Eng	Action Description Chief Eng	Sign & Date			

NOTE: Date & initial all entries

H:\FORMS\Quality Assurance\approved QA\NCRWO RevE

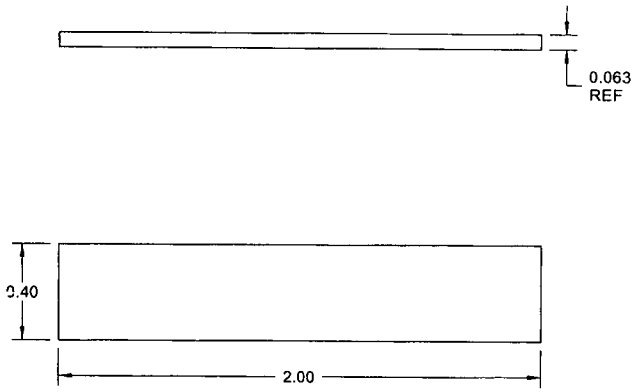

D4107-5 SPACER

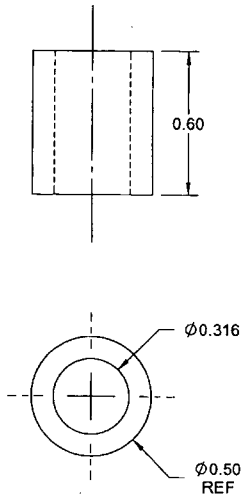

D4107-7 BALL STUD SPACER

NOTES:
1) MATERIAL -5: 6061-T6/T62 ALUMINUM SHEET, 0.063 THICK
PER QQ-A-250/11 OR AMS-QQ-A-250/11 OR AMS 4025 OR AMS 4027 OR ASTM B209
REF DART SPEC M6061T6S063
OR
ALUMINUM 2024-T3 SHEET 0.063 THICK
PER QQ-A-250/4 OR AMS-QQ-A-250/4 OR AMS4037 OR ASTM B209
REF DART SPEC M2024T3S.063
-7: 303/304/316 STAINLESS STEEL ROUND BAR Ø0.50, PER ASTM A276 OR ASTM A582
PER DART SPEC M303R0.500 OR M304R0.500
2) FINISH -5 : CHEMICAL CONVERSION COAT PER DART QSI 005 4.1
-7 : NONE
3) TOLERANCES: PER DART QSI 018 UNLESS OTHERWISE NOTED
4) UNITS: INCHES UNLESS OTHERWISE NOTED
5) BREAK SHARP EDGES: 0.005 TO 0.010 MAX
6) IDENTIFICATION: IDENT P/N D4107-X & B/N PER QSI 044.
7) WEIGHT -5: < 0.01 lbs
-7: 0.03 lbs

#62298

RELEASED
2010 -09- 23

DESIGN	JPH	DART AEROSPACE LTD HAWKESBURY, ONTARIO, CANADA
DRAWN	JPH	
CHECKED		DRAWING NO. D4107 — REV. A — SHEET 3 OF 3
MFG. APPR.		
APPROVED		TITLE: DOUBLER & SPACERS — SCALE: NTS
DE APPR.		
DATE	10.07.15	

Dart Aerospace Ltd

W/O:		WORK ORDER CHANGES					
DATE	STEP	PROCEDURE CHANGE	By	Date	Qty	Approval Chief Eng / Prod Mgr	Approval QC Inspector

Part No: _____ PAR #: _____ Fault Category: _____ NCR: Yes No DQA: _____ Date: _____

Resolution: _____ Disposition: _____ QA: N/C Closed: _____ Date: _____

NCR:		WORK ORDER NON-CONFORMANCE (NCR)						
DATE	STEP	Description of NC Section A	Corrective Action Section B			Verification Section C	Approval Chief Eng	Approval QC Inspector
			Initial Chief Eng	Action Description Chief Eng	Sign & Date			

NOTE: Date & initial all entries

H:\FORMS\Quality Assurance\approved QA\NCRWO RevE

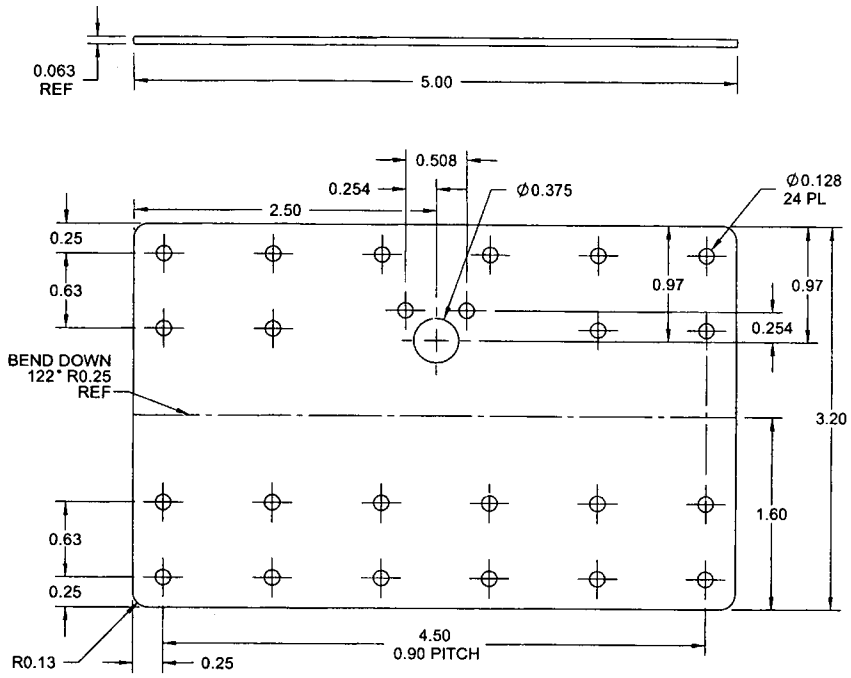

D4107-1F FLAT PATTERN, DOOR DOUBLER

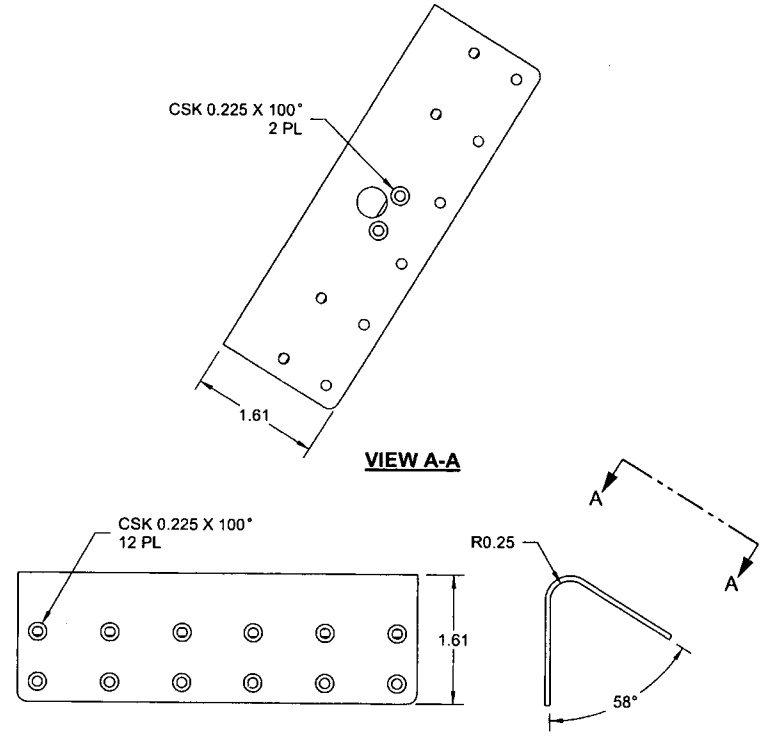

D4107-1 DOOR DOUBLER
(MAKE FROM D4107-1F)

RELEASED
2010 -09- 23

#62298

NOTES:
1) MATERIAL -1F: 303/304/316 STAINLESS STEEL SHEET ANNEALED 2B, 0.063 THK
PER MIL-S-5059 OR AMS 5513/5524 OR ASTM A240 OR ASME SA240
PER DART SPEC M304S16GA OR M303S16GA
-1 : MAKE FROM D4107-1F.
2) FINISH: NONE
3) TOLERANCES: PER DART QSI 018 UNLESS OTHERWISE NOTED
4) UNITS: INCHES UNLESS OTHERWISE NOTED
5) BREAK SHARP EDGES: 0.005 TO 0.010 MAX
6) IDENTIFICATION -1: IDENT P/N D4107-1 & B/N PER QSI 044 6.1
7) WEIGHT: 0.27 lbs

DESIGN	JPH	DART AEROSPACE LTD HAWKESBURY, ONTARIO, CANADA
DRAWN	JPH	
CHECKED		DRAWING NO. D4107 — REV. A — SHEET 2 OF 3
MFG. APPR.		
APPROVED		TITLE: DOUBLER & SPACERS — SCALE: NTS
DE APPR.		
DATE	10.07.15	

Dart Aerospace Ltd

W/O:		WORK ORDER CHANGES					
DATE	STEP	PROCEDURE CHANGE	By	Date	Qty	Approval Chief Eng / Prod Mgr	Approval QC Inspector

Part No: _____ PAR #: _____ Fault Category: _____ NCR: Yes No DQA: _____ Date: _____

Resolution: _____ Disposition: _____ QA: N/C Closed: _____ Date: _____

NCR:		WORK ORDER NON-CONFORMANCE (NCR)						
DATE	STEP	Description of NC Section A	Corrective Action Section B			Verification Section C	Approval Chief Eng	Approval QC Inspector
			Initial Chief Eng	Action Description Chief Eng	Sign & Date			

NOTE: Date & initial all entries

H:\FORMS\Quality Assurance\approved QA\NCRWO RevE

#62298

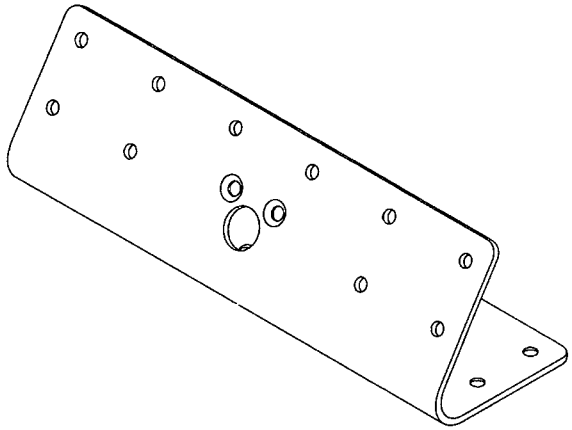

D4107-1 DOOR DOUBLER

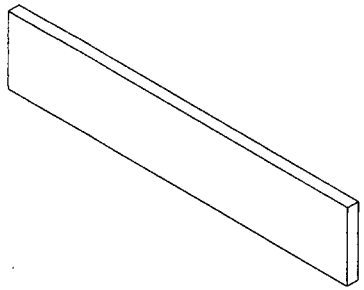

D4107-5 SPACER

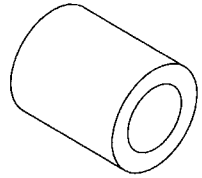

D4107-7 BALL STUD SPACER

RELEASED
2010 -09- 23

REV.	DESCRIPTION	BY	DATE
A	NEW ISSUE	JPH	10.07.15

DESIGN	JPH	**DART AEROSPACE LTD** HAWKESBURY, ONTARIO, CANADA
DRAWN	JPH	
CHECKED		DRAWING NO. D4107 — REV. A — SHEET 1 OF 3
MFG. APPR.		
APPROVED		TITLE: DOUBLER & SPACERS — SCALE: NTS
DE APPR.		
DATE	10.07.15	

Dart Aerospace Ltd

W/O:		WORK ORDER CHANGES					
DATE	STEP	PROCEDURE CHANGE	By	Date	Qty	Approval Chief Eng / Prod Mgr	Approval QC Inspector

Part No: _____ PAR #: _____ Fault Category: _____ NCR: Yes No DQA: _____ Date: _____

Resolution: _____ Disposition: _____ QA: N/C Closed: _____ Date: _____

NCR:		WORK ORDER NON-CONFORMANCE (NCR)						
DATE	STEP	Description of NC Section A	Corrective Action Section B			Verification Section C	Approval Chief Eng	Approval QC Inspector
			Initial Chief Eng	Action Description Chief Eng	Sign & Date			

NOTE: Date & initial all entries

H:\fFORMS\Quality Assurance\approved QA\NCRWO RevE

Picklist Print

Friday, September 24, 2010 3:24:31 PM

Work Order ID: 62298

Parent Item: D4107-5

Parent Item Name: Spacer

Start Date: 9/27/2010 **Required Date:** 10/4/2010

Start Qty: 3.00 **Required Qty:** 3.00

Comments: IPP Rev:A 10.09.24 new issue DD verf:FC

Component Item ID/ Item Name	Replacement Item ID	Mfg/ Purch	Bin Item	Primary Location	Last Location	Route Seq ID	Unit of Measure	Qty on Hand	Qty per Kit	Total Qty	Qty Issued	Date Issued	Status
M6061T6S.063 6061-T6 .063 Sheet		Purchased	No			100	sf	82.6840	0.0055	0.017368	.1 IB10-9-27		

Location	Loc Qty	Loc Code
MAT21	82.684	
113608	82.684	

113608

6

Dart Aerospace Ltd

W/O:		WORK ORDER CHANGES					
DATE	STEP	PROCEDURE CHANGE	By	Date	Qty	Approval Chief Eng / Prod Mgr	Approval QC Inspector

Part No: _____ PAR #: _____ Fault Category: _____ NCR: Yes No DQA: _____ Date: _____

Resolution: _____ Disposition: _____ QA: N/C Closed: _____ Date: _____

NCR:		WORK ORDER NON-CONFORMANCE (NCR)						
DATE	STEP	Description of NC Section A	Corrective Action Section B			Verification Section C	Approval Chief Eng	Approval QC Inspector
			Initial Chief Eng	Action Description Chief Eng	Sign & Date			

NOTE: Date & initial all entries

H:\FORMS\Quality Assurance\approved QA\NCRWO RevE

Work Order ID 62298

Friday, September 24, 2010 3:24:31 PM

Item ID: D4107-5 **Accept** **Setup Start**

Revision ID:

Item Name: Spacer **Stop**

Start Date: 9/27/2010 **Start Qty:** 3.00 **Cust Item ID:**

Required Date: 10/4/2010 **Req'd Qty:** 3.00 **Customer:**

Reference:

Approvals: **Process Plan:** _____ **Date:** _____ **Tooling:** _____ **Date:** _____ **Run Start**

QC: _____ **Date:** _____ **SPC (Y/N):** _____ **Date:** _____ **Stop**

Sequence ID/ Work Center ID	Operation Description	Set Up/ Run Hours	Tool ID	Tool #	Plan Code	Accept Qty	Reject Qty	Reject Number	Insp. Stamp
150	Identify as per dwg & ~~Stock~~ Location: 129	0.00							
Packaging									
Packaging	**Memo** PPP 62779 2x	0.00				10.10.12	6		
160	QC21- Final Inspection - Work Order Release	0.00							
QC						10.10.12			
Quality Control	**Memo**	0.00							

10-10-15 6

Dart Aerospace Ltd

W/O:		WORK ORDER CHANGES					
DATE	STEP	PROCEDURE CHANGE	By	Date	Qty	Approval Chief Eng / Prod Mgr	Approval QC Inspector

Part No: _____ PAR #: _____ Fault Category: _____ NCR: Yes No DQA: _____ Date: _____

Resolution: _____ Disposition: _____ QA: N/C Closed: _____ Date: _____

NCR:		WORK ORDER NON-CONFORMANCE (NCR)						
DATE	STEP	Description of NC Section A	Corrective Action Section B			Verification Section C	Approval Chief Eng	Approval QC Inspector
			Initial Chief Eng	Action Description Chief Eng	Sign & Date			

NOTE: Date & initial all entries

H:\FORMS\Quality Assurance\approved QA\NCRWO RevE

Work Order ID 62298

Friday, September 24, 2010 3:24:31 PM

Item ID: D4107-5 **Accept** **Setup Start**

Revision ID:

Item Name: Spacer **Stop**

Start Date: 9/27/2010 **Start Qty:** 3.00 **Cust Item ID:**

Required Date: 10/4/2010 **Req'd Qty:** 3.00 **Customer:**

Reference:

Approvals: **Process Plan:** _____ **Date:** _____ **Tooling:** _____ **Date:** _____ **Run Start**

QC: _____ **Date:** _____ **SPC (Y/N):** _____ **Date:** _____ **Stop**

Sequence ID/ Work Center ID	Operation Description	Set Up/ Run Hours	Tool ID	Tool #	Plan Code	Accept Qty	Reject Qty	Reject Number	Insp. Stamp
120	QC8- Inspect parts - second check	0.00							
QC	Memo	0.00							
Quality Control									
130	Chemical Conversion Coat per QSI005 4.1	0.00							
HandFinish	Memo	0.00							
Hand Finishing									
140	QC3- Inspect Part Finish	0.00							
QC	Memo	0.00							
Quality Control									

Dart Aerospace Ltd

W/O:		WORK ORDER CHANGES					
DATE	STEP	PROCEDURE CHANGE	By	Date	Qty	Approval Chief Eng / Prod Mgr	Approval QC Inspector

Part No: _____ PAR #: _____ Fault Category: _____ NCR: Yes No DQA: _____ Date: _____

Resolution: _____ Disposition: _____ QA: N/C Closed: _____ Date: _____

NCR:		WORK ORDER NON-CONFORMANCE (NCR)						
DATE	STEP	Description of NC Section A	Corrective Action Section B			Verification Section C	Approval Chief Eng	Approval QC Inspector
			Initial Chief Eng	Action Description Chief Eng	Sign & Date			

NOTE: Date & initial all entries

H:\FORMS\Quality Assurance\approved QA\NCRWO RevE

Work Order ID 62298

Friday, September 24, 2010 3:24:31 PM

Item ID: D4107-5 **Accept** **Setup Start**

Revision ID: **Stop**

Item Name: Spacer

Start Date: 9/27/2010 **Start Qty:** 3.00 **Cust Item ID:**

Required Date: 10/4/2010 **Req'd Qty:** 3.00 **Customer:**

Reference:

Approvals: **Process Plan:** MF **Date:** 10-9-24 **Tooling:** _____ **Date:** _____ **Run Start**

QC: _____ **Date:** _____ **SPC (Y/N):** _____ **Date:** _____ **Stop**

Sequence ID/ Work Center ID	Operation Description	Set Up/ Run Hours	Tool ID	Tool #	Plan Code	Accept Qty	Reject Qty	Reject Number	Insp. Stamp
Draw Nbr / **Revision Nbr**									
D4107 / A									
100		0.00							
Waterjet	**Memo**	0.00				HB 10-9-27			
FLOW CNC Waterjet	1-Cut as per Dwg Dwg Rev: A Prog Rev: A								
6061 .063	2-Deburr if necessary	SD 10/09/28				6		6	
110	QC2- Inspect parts off machine FAI/FAIB	0.00							
QC	**Memo**	0.00				HB 10-9-27			
Quality Control									

MATERIAL CERTIFICATION
REQ'D UPON DELIVERY
C 10/9/27